MURR ELEKTRONIK
stay connected

MVP-METALL, 8XM12, 5POLE, PRE-WIRED CABLE

3.0m PUR 16x0,5+3x1,0, UL/CSA

8-way, 5-pole
3.0 m
with LED for digital NPN-signals 24 V DC
Replaces identical product (Art.No. 27560)
Further cable lengths on request.

Link to Product

Illustration

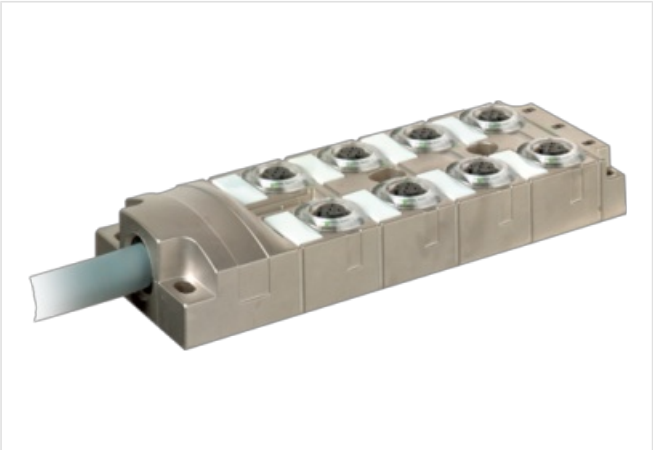

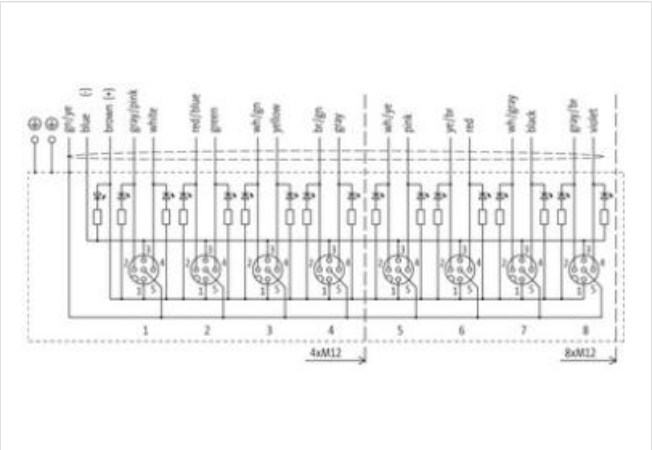

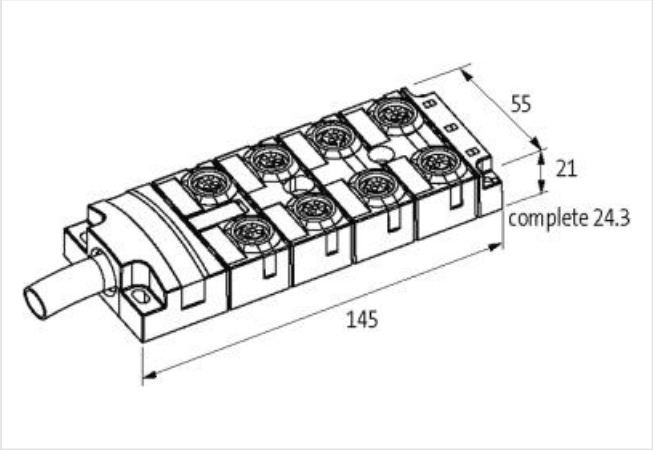

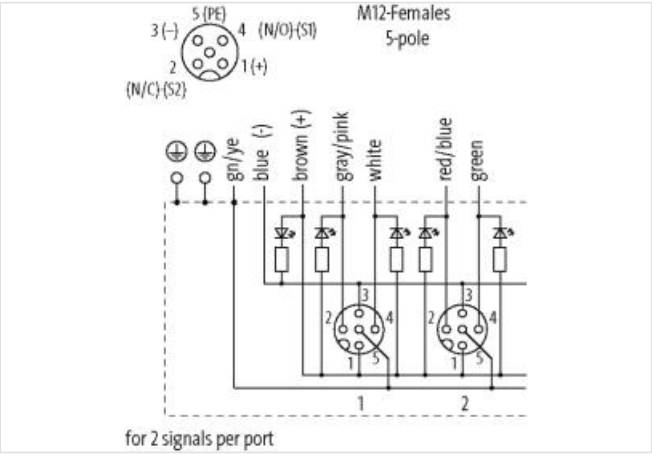

Product may differ from Image

Commercial data

ECLASS-6.0	27279219
ECLASS-6.1	27279219
ECLASS-7.0	27279219
ECLASS-8.0	27279219
ECLASS-9.0	27440108

ECLASS-10.1	27440108
ECLASS-11.1	27440108
ECLASS-12.0	27440108
ETIM-5.0	EC002585
customs tariff number	85444290
GTIN	4048879352918
Packaging unit	1
Electrical data | Supply	
Operating voltage DC	24 V
Current operating per contact max.	4 A
Installation | Connection	
Mounting set	M12 x 1
Device protection | Electrical	
Degree of protection (EN IEC 60529)	IP65, IP67, IP68
Mechanical data | Material data	
Coating housing	Nickeled
Material housing	Zinc die-casting
Mechanical data | Mounting data	
Mounting method	Schraubgewinde
Environmental characteristics | Climatic	
Operating temperature min.	-25 °C
Operating temperature max.	90 °C
Additional condition temperature range	depending on cable quality
Installation | Cable	
Cable identification	452
Jacket Color	gray
Type of Certificate	cURus
Amount stranding	1
Stranding	7 wires around Core filler twisted
Amount stranding (type 2)	1
Stranding (type 2)	12 wires counter-rotating twisted
Banding	Fleece
Filler	yes
wire arrangement	gray-pink, brown-green, yellow, green-white, green, red-blue, white, (brown-gray, black, gray-white, red, brown-yellow, pink, yellow-white, gray, blue, brown, green-yellow, violet)
No. of bending cycles (C-track)	5 Mio. @ 25 °C
Cable weigth	231 g/m
Material jacket	PUR
Shore hardness jacket	94 ± 5 Shore A
Freedom from ingredients (jacket)	lead-free, cadmium-free, CFC-free, halogen-free
Outer-diameter (jacket)	11,5 mm
Tolerance outer diameter (sheath)	± 5 %
Material wire insulation	TPE-E
Amount wires	16
Outer diameter insulation	1,6 mm
Outer diameter tolerance core insulation	± 5 %
Shore hardness wire insulation	55 ± 5 Shore D
Ingredient freeness wire insulation	lead-free, CFC-free, halogen-free, silicone-free, LABS-free
Amount strands (wire)	64
Diameter of single wires	0,1 mm
Conductor crosssection (wire)	0,5 mm²
Material conductor wire	Stranded copper wire, bare

Conductor type (wire)	strand class 6
Material wire insulation (Data)	TPE-E
Outer diameter wire insulation (Data)	2,1 mm
Tolerance outer diameter wire insulation (data)	± 5 %
Shore hardness wire insulation (Data)	55 ± 5 Shore D
Ingredient freeness wire insulation (Data)	lead-free, halogen-free, silicone-free, LABS-free
Amount wires (Data)	3
Amount strands wire (Data)	128
Diameter of single wires (Data)	0,1 mm
Conductor crosssection wire (Data)	1 mm²
Material conductor wire (Data)	Stranded copper wire, bare
Wire conductor type (Data)	strand class 6
Traversing distance (C-track)	5 m @ 25 °C
Current load capacity (standard)	to DIN VDE 0298-4
Current load capacity min. wire	5,9 A
Current load capacity min. Wire (Data)	15 A
Electrical resistance line constant wire	39 Ω/km @ 20 °C
Electrical resistance coating wire (Data)	20 Ω/km @ 20 °C
Max. rated voltage power (conductor - ground)	300 V
Max. rated voltage power (conductor - conductor)	300 V
Power frequency withstand voltage power (wire - jacket)	2 kV @ 60 s
AC withstand voltage power (wire - wire)	2 kV @ 60 s
Min. operating temperature (static)	-40 °C
Max. operating temperature (fixed)	90 °C
Operating temperature min. (dynamic)	-20 °C
Operating temperature max. (dynamic)	90 °C
Flame resistance	UL 1581 § 1100 FT2 | IEC 60332-2-2 | UL 1581 § 1090
chemical resistance	Good, application-related testing
Gasoline resistance	Good, application-related testing
Oil resistance	Good, application-related testing | DIN EN 60811-404
Bending radius (installation)	x Outer diameter
Bending radius (fixed)	8 x Outer diameter
Bending radius (dynamic)	10 x Outer diameter
Connection type 2	
Family construction form	free cable end
No. of poles	16
Family construction form	M12
Gender	female
Color contact carrier	black
Coding	A
No. of poles	5
PIN 1	+
PIN 2	NC S 2
PIN 3	-
PIN 4	NO S 1
PIN 5	PE