MURR ELEKTRONIK
stay connected

M12 female 90° A-cod. with cable

RADOX EM 104 4x0.5 bk 4m

Female 90°
M12, 4-pole
with cable sleeves
Plastic housings with good resistance against chemicals and oils.
The resistance to aggressive media should be individually tested for your application. Further details on request.
Further cable lengths on request.

Link to Product

Illustration

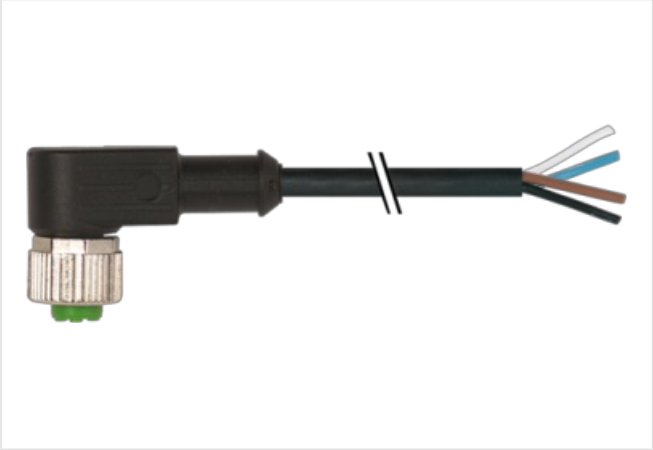

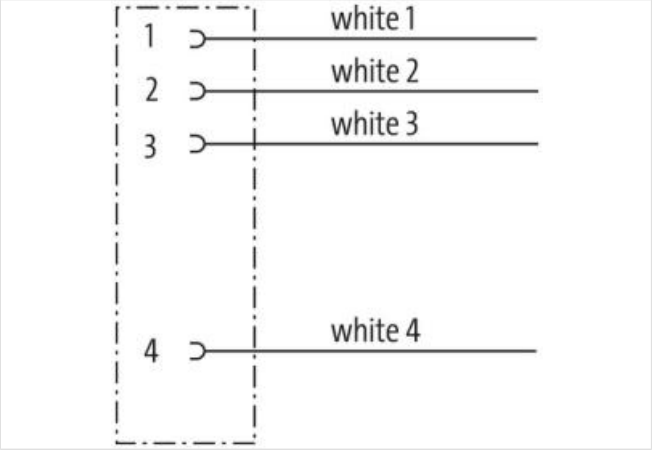

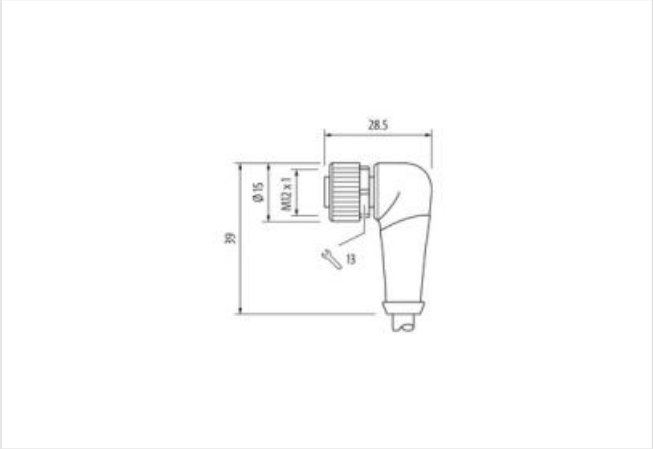

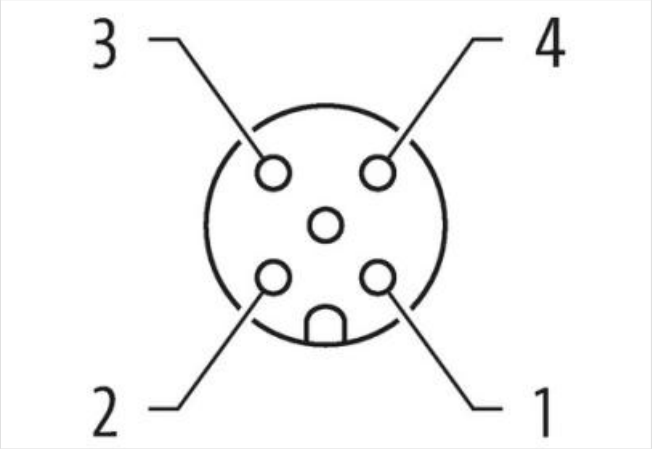

Product may differ from Image

Cable length	4 m
Side 1	
Tightening torque	0,6 Nm
Mounting method	inserted, screwed
Family construction form	M12
Thread	M12 x 1
suitable for corrugated tube (internal Ø)	10 mm
Coding	A

The information in this Product-PDF has been compiled with the utmost care.
Liability for the correctness completeness and topicality of the information is restricted to gross negligence. Version: 2024-05-19

Width across flats	SW13
Side 2	
Stripping length (jacket)	40 mm
Commercial data	
ECLASS-6.0	27279218
ECLASS-6.1	27279218
ECLASS-7.0	27279218
ECLASS-8.0	27279218
ECLASS-9.0	27060311
ECLASS-10.1	27060311
ECLASS-11.1	27060311
ECLASS-12.0	27060311
ETIM-5.0	EC001855
customs tariff number	85444290
GTIN	4065909054918
Packaging unit	1
Electrical data | Supply	
Operating voltage AC max.	250 V
Operating voltage DC max.	250 V
Current operating per contact max.	4 A
Installation | Connection	
Stripping length (jacket)	40 mm
Device protection | Electrical	
Pollution Degree	3
Rated surge voltage	2,5 kV
Material group (IEC 60664-1)	I
Mechanical data | Material data	
Coating locking	Nickeled
Material housing	PUR
Locking material	Zinc die-casting
Mechanical data | Mounting data	
Mounting method	inserted, screwed, Shaking protection
Environmental characteristics | Climatic	
Operating temperature min.	-25 °C
Operating temperature max.	85 °C
Additional condition temperature range	depending on cable quality
Important installation notes	
Note on strain relief	Protect the connectors by suitable measures from mechanical loads, e.g. by the usage of cable ties.
Note on bending radius	**Attention:** Observe the permissible bending radii when laying cables, as the IP protection class can be endangered by excessive bending forces.
Conformity	
Product standard	DIN EN 61076-2-101 (M12)
Installation | Cable	
Cable identification	R03
Printing color of wire insulation	black (white isolation)
Printing spacing of wire insulation	15 mm
Jacket Color	black
Amount stranding	1
Stranding	4 wires twisted
wire arrangement	white 1, white 2, white 3, white 4

The information in this Product-PDF has been compiled with the utmost care.
Liability for the correctness completeness and topicality of the information is restricted to gross negligence. Version: 2024-05-19

Cable weigth	50,6 g/m
Material jacket	Radox EM 104
Outer-diameter (jacket)	5 mm
Tolerance outer diameter (sheath)	± 5 %
Material wire insulation	Radox EI 303
Amount wires	4
Outer diameter insulation	1,42 mm
Outer diameter tolerance core insulation	± 5 %
Printing color of wire insulation	black (white isolation)
Printing spacing of wire insulation	15 mm
Amount strands (wire)	19
Diameter of single wires	0,18 mm
Conductor crosssection (wire)	0,5 mm²
Material conductor wire	copper stranded wire, tinned
Max. rated voltage (conductor - conductor)	1000 V
Max. rated voltage (conductor - ground)	600 V
Current load capacity (standard)	to DIN VDE 0298-4
Current load capacity min. wire	7,2 A
Electrical resistance line constant wire	40,1 Ω/km @ 20 °C
AC withstand voltage (wire - wire)	3,5 kV
Power frequency withstand voltage (wire - jacket)	3,5 kV
Min. operating temperature (static)	-50 °C
Max. operating temperature (fixed)	120 °C
Operating temperature min. (dynamic)	-25 °C
Operating temperature max. (dynamic)	90 °C
Flame resistance	UL 1581 § 1100 FT2 | UL 1581 § 1090 | IEC 60332-2-2
chemical resistance	Good, application-related testing
Gasoline resistance	Good, application-related testing
Oil resistance	DIN EN 60811-404 | Good, application-related testing
Bending radius (fixed)	3 x Outer diameter
Bending radius (dynamic)	4 x Outer diameter

The information in this Product-PDF has been compiled with the utmost care.
Liability for the correctness completeness and topicality of the information is restricted to gross negligence. Version: 2024-05-19