M12 male 0° / RJ45 male 0° D-cod. shielded V2A

PUR 1x4xAWG22 shielded gn UL/CSA+drag ch. 10m

Product fulfills requirements according to UN/ECE R118
Ethernet CAT5
The resistance to aggressive media should be individually tested for your application. Further details on request.
Male straight – male straight
M12 – RJ45, 4-pole
D-coded
shielded
8-pole partly used
Stainless steel 1.4305 (V2A)
Further cable lengths on request.
Plastic housings with good resistance against chemicals and oils.

Link to Product

Illustration

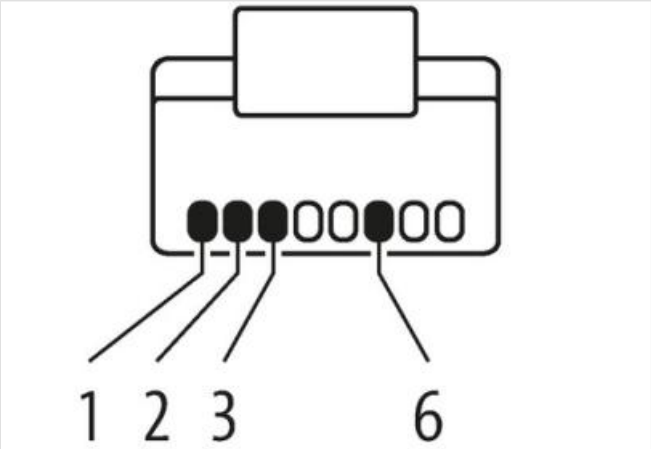

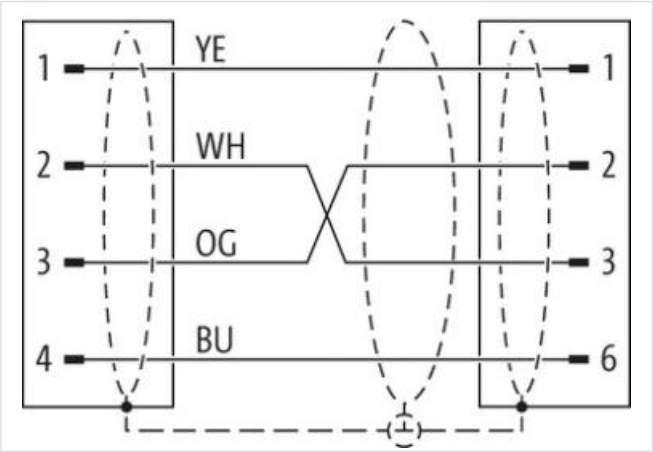

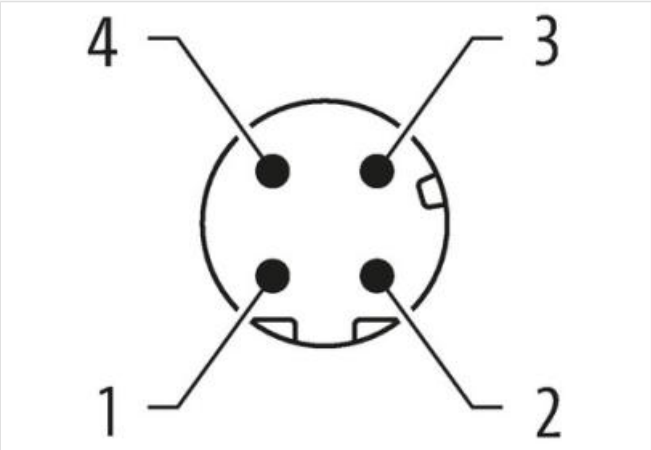

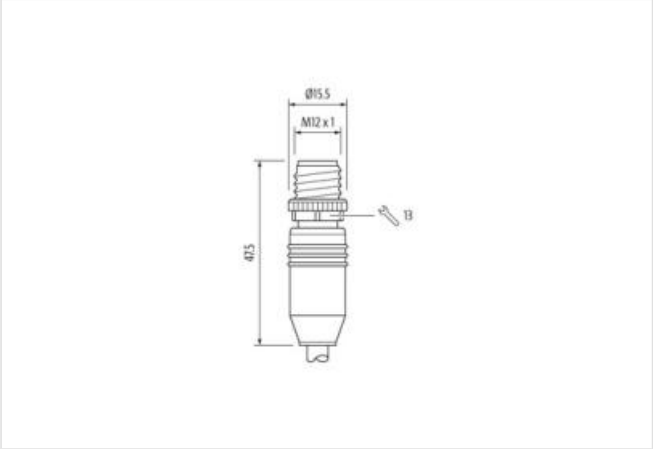

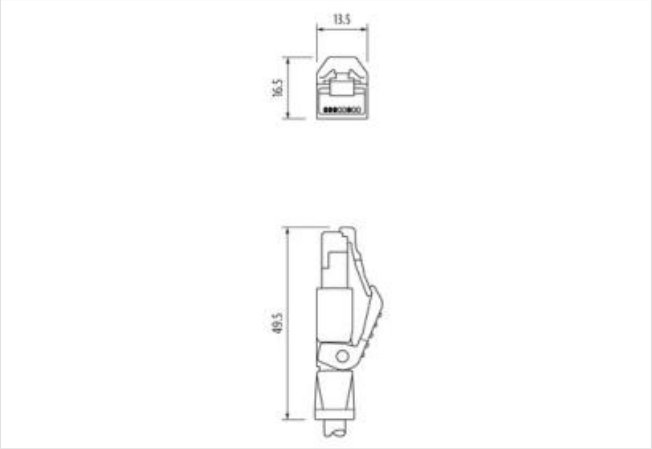

Product may differ from Image

Cable length	10 m
Side 1	
Tightening torque	0,6 Nm
Family construction form	M12
Thread	M12 x 1
Width across flats	SW13
Degree of protection (EN IEC 60529)	IP67
Side 2	
Family construction form	RJ45
Degree of protection (EN IEC 60529)	IP20
Commercial data	
ECLASS-6.0	27061801
ECLASS-6.1	27060307
ECLASS-7.0	27060307
ECLASS-8.0	27060307
ECLASS-9.0	27060307
ECLASS-10.1	27060307
ECLASS-11.1	27060307
ECLASS-12.0	27060307
ETIM-5.0	EC002599
customs tariff number	85444290
GTIN	4048879287630
Packaging unit	1
Electrical data | Supply	
Operating voltage DC max.	60 V
Operating voltage DC max. (UL-listed)	30 V
Current operating per contact max.	1,5 A
Industrial communication	
Transfer parameters	CAT5, Class D (ISO/IEC 11801:2002), (EN 50173-1)
Data transmission rate max.	100 MBit/s
Industrial communication | Ethernet functionality	

duplex	Full duplex
Device protection | Electrical	
Pollution Degree	3
Rated surge voltage	1 kV
Material group (IEC 60664-1)	I
Mechanical data	
Contour for corrugated hose	without
Mechanical data | Material data	
Locking material	Stainless steel 1.4305 (V2A)
Mechanical data | Mounting data	
Mounting method	inserted, screwed, Shaking protection
Environmental characteristics | Climatic	
Operating temperature min.	-25 °C
Operating temperature max.	85 °C
Additional condition temperature range	depending on cable quality
Conformity	
Product standard	DIN EN 61076-2-101 (M12)
Installation | Cable	
Cable identification	796
Jacket Color	green
Type of Certificate	cURus
Amount stranding	1
Stranding	4 wires around Core filler twisted
Cable shielding (type)	copper braid, tinned
Cable shielding (coverage)	85 %
Banding	Fleece, Foil
Filler	yes
wire arrangement	white, yellow, blue, orange
No. of bending cycles (C-track)	3 Mio. @ 25 °C
Cable weigth	69,3 g/m
Material jacket	PUR
Shore hardness jacket	89 Shore A
Freedom from ingredients (jacket)	lead-free, cadmium-free, CFC-free, halogen-free, silicone-free
Outer-diameter (jacket)	6,7 mm
Tolerance outer diameter (sheath)	± 5 %
Material inner jacket	FRNC
Color (inner jacket)	natur
Material wire insulation	PE
Amount wires	4
Outer diameter insulation	1,4 mm
Outer diameter tolerance core insulation	± 5 %
Shore hardness wire insulation	65 Shore D
Ingredient freeness wire insulation	lead-free, CFC-free, halogen-free
Amount strands (wire)	7
Diameter of single wires	22 AWG
Conductor crosssection (wire)	22 AWG
Material conductor wire	Stranded copper wire, bare
Traversing distance (C-track)	5 m @ 25 °C
Current load capacity (standard)	to DIN VDE 0298-4
Current load capacity min. wire	4,8 A
Characteristic impedance	100 Ω ± 15 % @ 100 MHz

Electrical resistance line constant wire	55 Ω/km @ 20 °C
Loop resistance	5000 MΩ × km
Nominal voltage power AC max.	300 V
Electrical capacity line constant (wire - wire) (power)	50000 pF/km
AC withstand voltage power (wire - shield)	2 kV @ 60 s
Power frequency withstand voltage power (wire - jacket)	2 kV @ 60 s
AC withstand voltage power (wire - wire)	2 kV @ 60 s
Min. operating temperature (static)	-40 °C
Max. operating temperature (fixed)	80 °C
Operating temperature min. (dynamic)	-30 °C
Operating temperature max. (dynamic)	70 °C
Flame resistance	IEC 60332-2-2 | UL 1581 § 1090 | UL 1581 § 1100 FT2
chemical resistance	Good, application-related testing
Gasoline resistance	Good, application-related testing
Oil resistance	DIN EN 60811-404 | Good, application-related testing
Bending radius (fixed)	5 x Outer diameter
Bending radius (dynamic)	12 x Outer diameter
No. of torsion cycles	1 Mio. 25 °C
Torsion stress	± 180 °/m