M12 Power male 0° / female 0° L-cod.

PUR 4x2.5 bk UL/CSA+drag ch. 2.5m

Power
Male straight – female straight
M12 – M12, 4-pole
L-coded
with cable sleeves
Plastic housings with good resistance against chemicals and oils.
The resistance to aggressive media should be individually tested for your application. Further details on request.
Further cable lengths on request.

Link to Product

Illustration

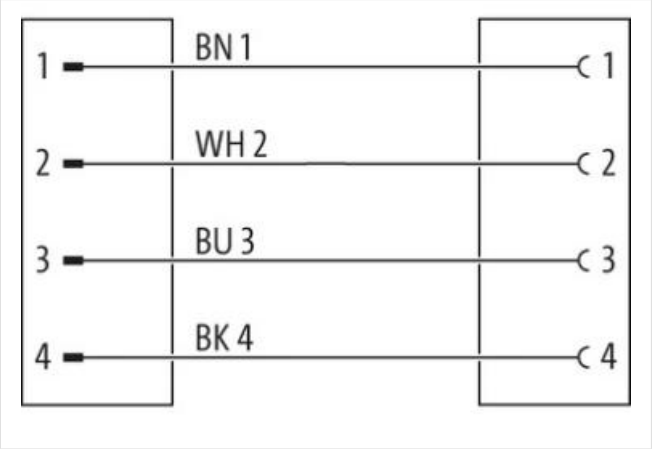

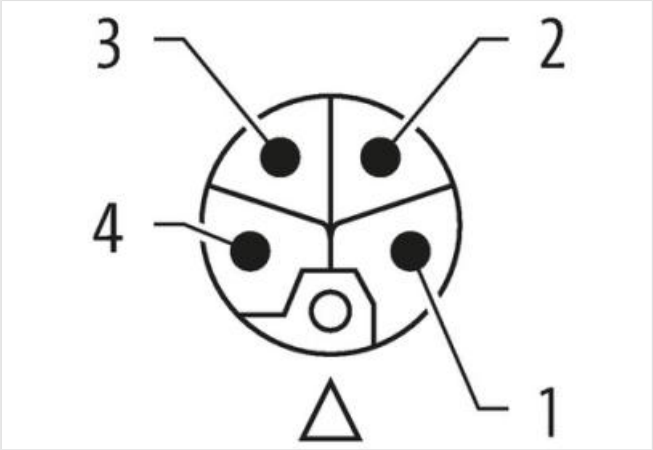

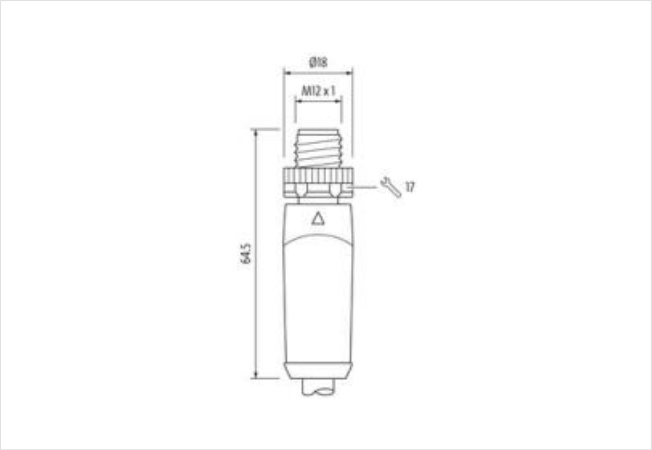

The information in this Product-PDF has been compiled with the utmost care.
Liability for the correctness completeness and topicality of the information is restricted to gross negligence. Version: 2024-05-18

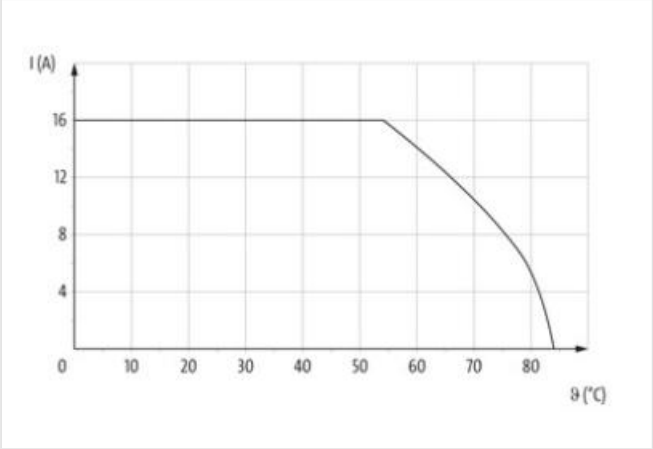

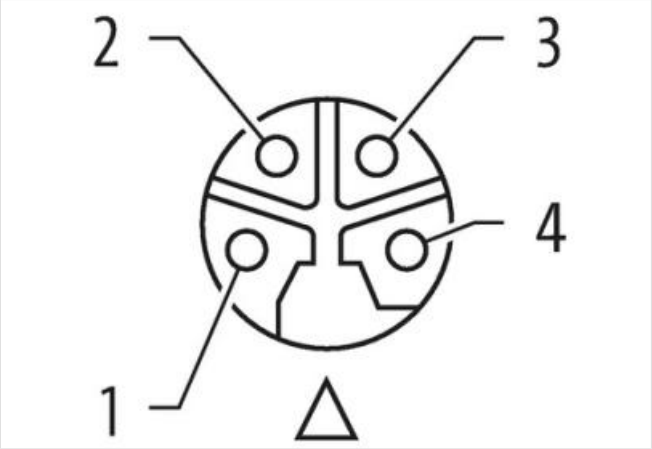

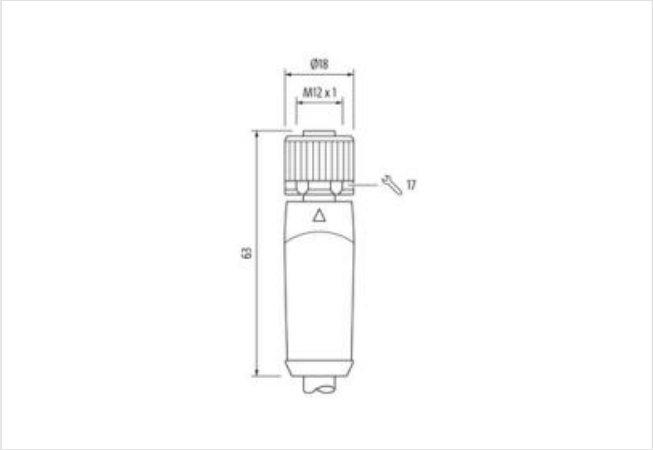

Product may differ from Image

Cable length	2,5 m
Side 1	
Tightening torque	0,6 Nm
Mounting method	inserted, screwed
Coating contact	gold plated
Family construction form	M12P
Thread	M12 x 1
suitable for corrugated tube (internal Ø)	12 mm
Coding	L
Material contact	Copper alloy
No. of poles	4
Side 2	
Tightening torque	0,6 Nm
Mounting method	inserted, screwed
Coating contact	gold plated
Family construction form	M12P
Thread	M12 x 1
Coding	L

The information in this Product-PDF has been compiled with the utmost care.
Liability for the correctness completeness and topicality of the information is restricted to gross negligence. Version: 2024-05-18

Material contact	Copper alloy
No. of poles	4
Commercial data	
ECLASS-6.0	27279218
ECLASS-6.1	27279218
ECLASS-7.0	27279218
ECLASS-8.0	27279218
ECLASS-9.0	27060327
ECLASS-10.1	27060311
ECLASS-11.1	27060311
ECLASS-12.0	27060327
ETIM-5.0	EC001855
customs tariff number	85444290
GTIN	4065909054888
Packaging unit	1
Electrical data | Supply	
Operating voltage DC max.	63 V
Current operating per contact max.	16 A
Diagnostics	
Status indication LED	no
Installation | Connection	
Width across flats	SW17
Device protection | Electrical	
Degree of protection (EN IEC 60529)	IP65, IP67
Additional condition protection degree	inserted, screwed
Pollution Degree	3
Rated surge voltage	1,5 kV
Material group (IEC 60664-1)	I
Mechanical data | Material data	
Coating locking	Nickeled
Material gasket	FKM
Material housing	PUR
Locking material	Zinc die-casting
Mechanical data | Mounting data	
Mounting method	inserted, screwed, Shaking protection
Environmental characteristics | Climatic	
Operating temperature min.	-25 °C
Operating temperature max.	85 °C
Additional condition temperature range	depending on cable quality
Conformity	
Product standard	IEC 61076-2-111
Installation | Cable	
Cable identification	P37
Cable Type	3
Printing color of wire insulation	black (white isolation), white (isolation blue), white (isolation brown), white (isolation black)
Jacket Color	black
Type of Certificate	cURus
Amount stranding	1
Stranding	4 wires twisted
wire arrangement	black 4, blue 3, white 2, brown 1

The information in this Product-PDF has been compiled with the utmost care.
Liability for the correctness completeness and topicality of the information is restricted to gross negligence. Version: 2024-05-18

Material jacket	PUR
Shore hardness jacket	90 ± 5 Shore A
Freedom from ingredients (jacket)	lead-free, cadmium-free, CFC-free, halogen-free, silicone-free
Outer-diameter (jacket)	8,7 mm
Tolerance outer diameter (sheath)	± 5 %
Material wire insulation	PP
Amount wires	4
Outer diameter insulation	2,85 mm
Outer diameter tolerance core insulation	± 5 %
Shore hardness wire insulation	60 ± 5 Shore D
Ingredient freeness wire insulation	lead-free, cadmium-free, CFC-free, halogen-free, silicone-free
Printing color of wire insulation	black (white isolation), white (isolation blue), white (isolation brown), white (isolation black)
Amount strands (wire)	141
Diameter of single wires	0,15 mm
Conductor crosssection (wire)	2,5 mm²
Material conductor wire	Stranded copper wire, bare
Conductor type (wire)	strand class 6
Traversing distance (C-track)	5 m @ 25 °C
Nominal voltage AC max.	1000 V
Current load capacity (standard)	to DIN VDE 0298-4
Current load capacity min. wire	20,8 A
Electrical resistance line constant wire	8 Ω/km @ 20 °C
AC withstand voltage (wire - wire)	10 kV @ 60 s
Power frequency withstand voltage (wire - jacket)	10 kV @ 60 s
Min. operating temperature (static)	-50 °C
Max. operating temperature (fixed)	80 °C / 90 °C @ 10000 h Operation
Operating temperature min. (dynamic)	-25 °C
Operating temperature max. (dynamic)	80 °C / 90 °C @ 10000 h Operation
UV resistance	DIN EN ISO 4892-2 A
Flame resistance	UL 1581 § 1100 FT2 | UL 1581 § 1090 | IEC 60332-2-2
chemical resistance	Good, application-related testing
Gasoline resistance	Good, application-related testing
Oil resistance	Good, application-related testing | DIN EN 60811-404
Bending radius (installation)	x Outer diameter
Bending radius (fixed)	7,5 x Outer diameter
Bending radius (dynamic)	10 x Outer diameter
Travel speed (C-track)	5 Mio. @ 25 °C
No. of torsion cycles	2 Mio.
Torsion stress	± 180 °/m
Torsion speed	35 cycles/min

The information in this Product-PDF has been compiled with the utmost care.
Liability for the correctness completeness and topicality of the information is restricted to gross negligence. Version: 2024-05-18