MURR ELEKTRONIK
stay connected

## CUBE20S Analog output module AO4

4X16Bit (U 0…10 V)

Expansion module
AO4 - (E) U
Voltage

Link to Product

### Illustration

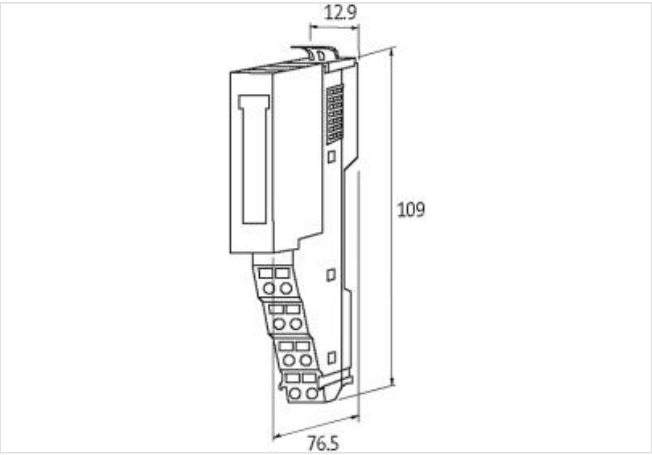


Product may differ from Image

### Commercial data

| | |
|---|---|
| ECLASS-6.0 | 27242601 |
| ECLASS-6.1 | 27242601 |
| ECLASS-7.0 | 27242601 |
| ECLASS-8.0 | 27242601 |
| ECLASS-9.0 | 27242601 |
| ECLASS-10.1 | 27242601 |
| ECLASS-11.1 | 27242601 |
| ECLASS-12.0 | 27242601 |
| ETIM-5.0 | EC001596 |
| customs tariff number | 85389099 |
| GTIN | 4048879424615 |
| Packaging unit | 1 |

### Electrical data | Supply

| | |
|---|---|
| Current consumption max. | 60 mA |
| module supply | via system connection |

### Electrical data | Output

| | |
|---|---|
| Working resistance min. | 5 kΩ |
| Conversion time analog output | 0,2 ms |

### Diagnostics

| | |
|---|---|
| Actuator warning | per module via LED and BUS |
| Diagnostic | Under voltage |

The information in this Product-PDF has been compiled with the utmost care.
Liability for the correctness completeness and topicality of the information is restricted to gross negligence. Version: 2024-04-23

| | |
|---|---|
| Diagnostic via BUS | per module |
| Diagnostic via LED | per module and channel |
| Short circuit diagnosis | yes |
| LED display | Ethernet connection/data traffic |
| Overload diagnosis | yes |
| **Device protection \| Electrical** | |
| Degree of protection (EN IEC 60529) | IP20 |
| Galvanic separation (operating voltage) | yes |
| Galvanic separation input/input | yes |
| **Mechanical data \| Mounting data** | |
| Mounting method | geschnappt |
| Suitable for mounting type | mounting rail, (EN 60715) |
| Height | 109 mm |
| Width | 12,9 mm |
| Depth | 76,5 mm |
| **Environmental characteristics \| Climatic** | |
| Operating temperature min. | 0 °C |
| Operating temperature max. | 60 °C |
| Storage temperature min. | -25 °C |
| Storage temperature max. | 70 °C |
| **Connection type 2** | |
| Connection type 1 | Power |
| Connection type 2 | Power |
| Connection | Spring clamp terminals FK |
| Family construction form | terminal |
| Gender | female |
| No. of poles | 8 |
| PIN 1 | n.c. |
| PIN 2 | 24 V DC |
| PIN 3 | 0 V |
| PIN 4 | 24 V DC Sys |
| PIN 5 | n.c. |
| PIN 6 | 24 V DC |
| PIN 7 | 0 V |
| PIN 8 | 0 V Sys |
| Connection | Spring clamp terminals FK |
| Family construction form | terminal |
| Gender | female |
| No. of poles | 8 |
| PIN 1 | AO 0 |
| PIN 2 | AGND |
| PIN 3 | AO 2 |
| PIN 4 | AGND |
| PIN 5 | AO 1 |
| PIN 6 | AGND |
| PIN 7 | AO 3 |
| PIN 8 | AGND |

The information in this Product-PDF has been compiled with the utmost care.
Liability for the correctness completeness and topicality of the information is restricted to gross negligence. Version: 2024-04-23